veneporte

CLEAN ENVIRONMENT SOLUTIONS

PRODUCT TECHNICAL SHEET
SCR
(Selective Catalytic Reduction)

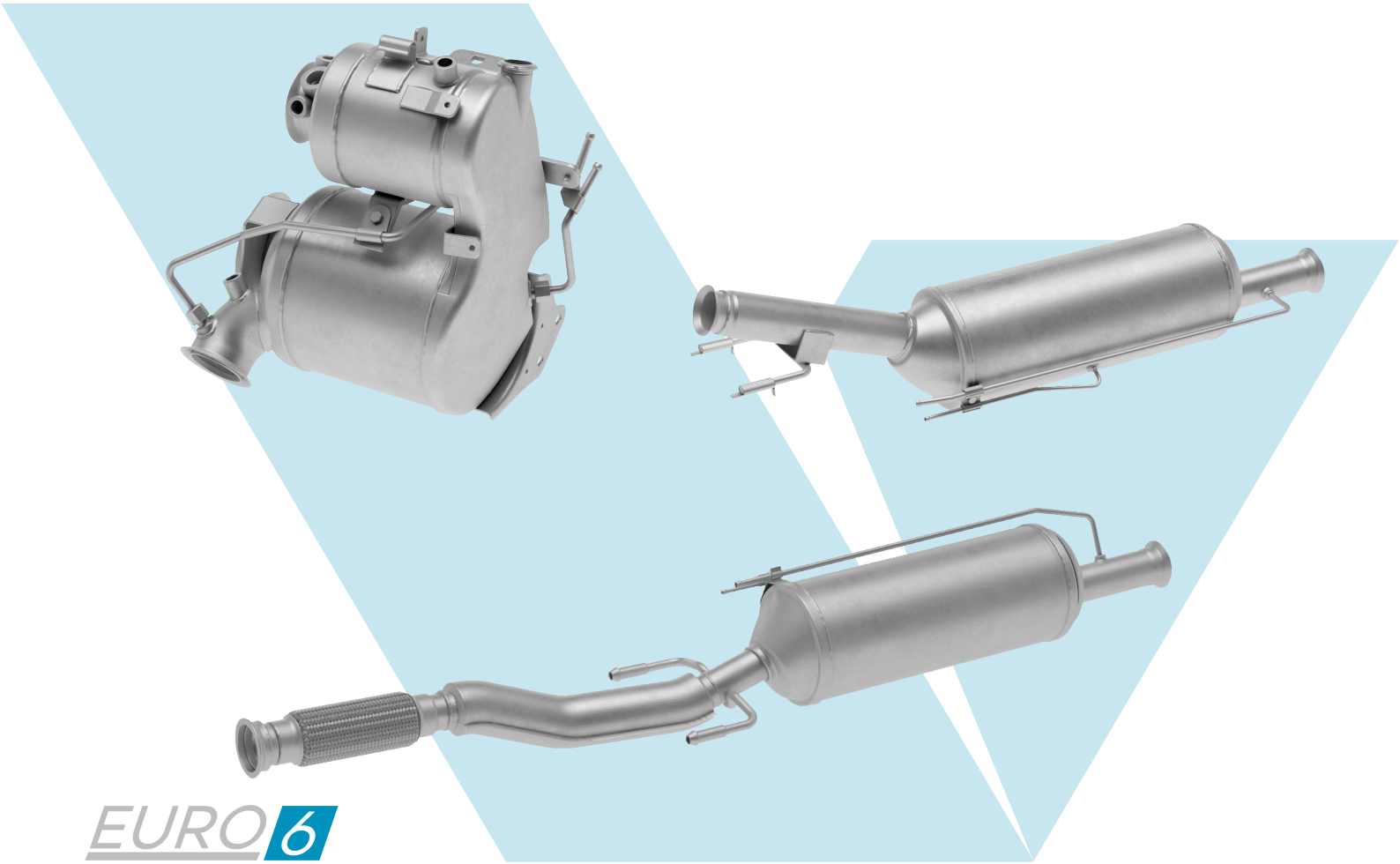

EURO 6

100% HOMOLOGATED RANGE

GLOBAL RANGE SUPPLIER OEM / OES / IAM GLOBAL RANGE SUPPLIER

Less Emissions

Better Life

E: geral@veneporte.pt
www.veneporte.pt

TecAlliance

Management System IATF 16949:2016 ISO 9001:2015
TÜVRheinland CERTIFIED
www.tuv.com ID 0910088105

What is a SCR?

The SCR (Selective Catalytic Reduction) is the most advanced emissions control system for automobile vehicles. It has as its main goal the reduction of NOx (nitrogen oxides) levels produced by diesel engines, transforming them into inoffensive substances for the human being and the environment.
Thanks to its high efficiency in emissions reduction, the SCR is an essential technology to fulfill the rigorous targets demanded by the EURO 6 norm.

How it works

1. For this kind of system is necessary an external reducing agent to the normal combustion of the engine, tipically nominated DEF (Diesel Emissions Fluid). This agent is properly injected into the system upstream of the SCR position. When in contact with the exhaust gases, resulting from combustion, all the mixture is forced to pass through a component called mixer, which enables a homogeneous distribution of the mixture over all the SCR surface.

2. This reducing agent unchains a chemical reaction that transforms the nitrogen oxides (NOx) in nitrogen (N_2), water vapor (H_2O), and small quantities of carbon dioxide (CO_2).

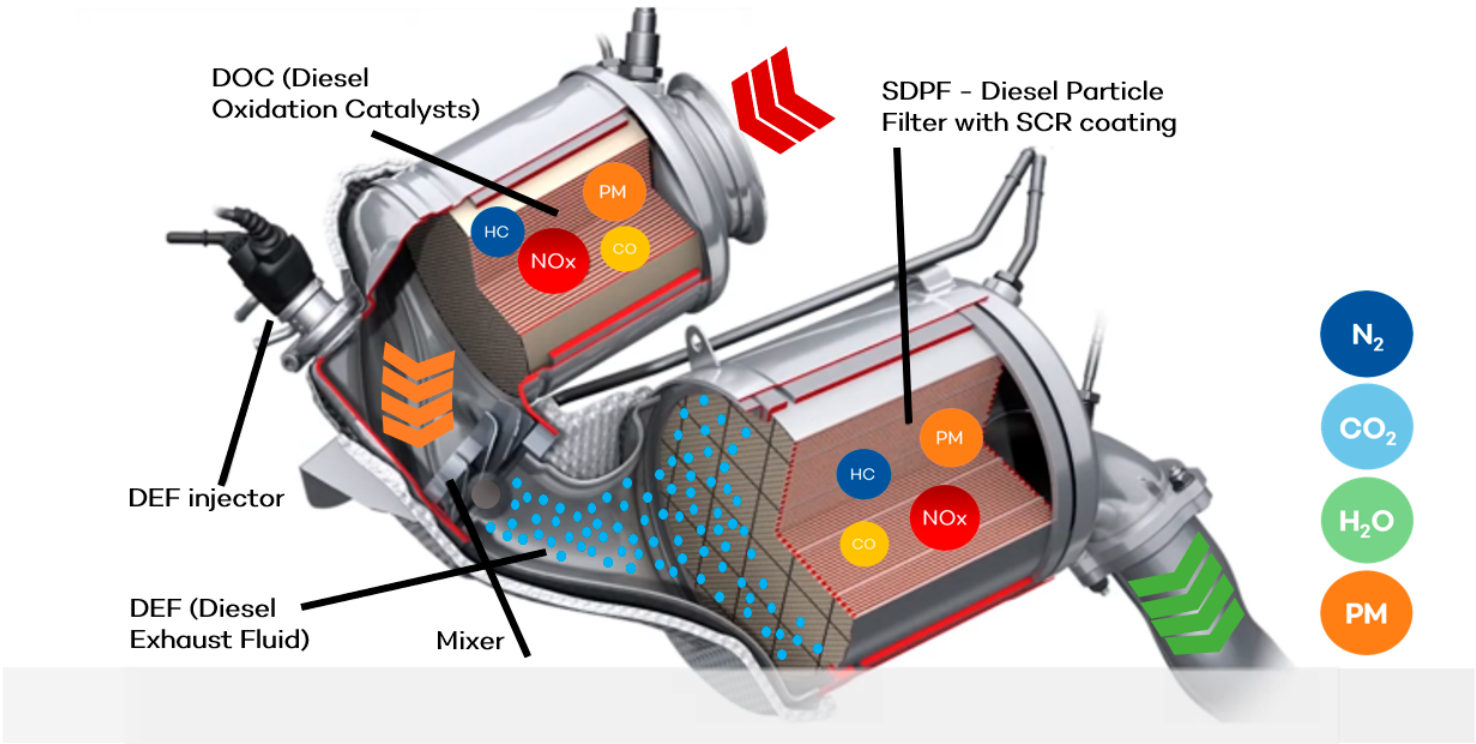

DEF (Diesel Emissions Fluid)

The DEF is an aqueous solution that usually has in its constitution 32,5% of urea and 67,5% of unmineralized water. This solution is injected in a determined position of the vehicle's exhaust system, preferably upstream of the mixer, guaranteeing that the mixture "DEF + exhaust gases" reaches the SCR, distributed the most homogeneous possible. This aqueous solution has the objective of obtaining ammonia after its decomposition, enabling the transformation of nocive gases into inoffensive ones after passing through the SCR. One of the most known mixtures is called AdBlue.

The amount of DEF that must reach the system is done through a dedicated injector and is calculated by the vehicle's control unit, through an algorithm developed by the manufacturer that has into account all variables, in its majority with a non-linear variation. Among all variables that influence the DEF amount to be injected, some of them are obtained through sensor readings, as the NOx sensors (located at the entry and exit of the SCR), as well as the engine's operating regimen.

SDPF

Ils a technology that integrates the filtering capacity of solid particles and the NOx reduction in a single component. The SCR coating is impregnated in the DPF and can be composed of Copper-Zeolite (Cu-Ze), Iron-Zeolite (Fe-Ze), or Vanadium (V). This configuration has the advantage of enabling the reduction of the gases treatment system's total volume, as well as enabling to reach the ideal operating temperatures quicker due to bigger proximity to the engine system.

ASC (Ammonia Slip Catalyst)

Due to the existing difficulty of coordinating the amount of DEF to be injected according to the vehicle's operating regimen, exists an issue associated with the excess of ammonia generated by the SCR. In this sense, an ASC can be used downstream of the SCR, avoiding the ammonia emissions to the exterior. The presence of this component in the system increases the tolerance to eventual DEF overdosages. However, only works well at high temperatures and can lead to an unwanted production of nitrous oxide (N_2O).

Euro Levels

The Euro Levels are directives established by the European Union, which main goals are to limit pollutant emissions and to define standards for the performance of automotive tests. The emergence and evolution of these directives lead to the introduction of new components in the exhaust system, as the catalytic converters, particulate filters, and most recently, SCRs. TThe tables present the evolution of the maximum limits permitted regarding the various pollutant gases and particles emissions for diesel and petrol light vehicles.

POSITIVE IGNITION - PETROL							
STAGE	DATE	CO G/KM	HC	HC + NOx	NOx	PM	PN #/KM
EURO 1	07/1992	2.72 (3.16)	•	0.97 (1.13)	•	•	•
EURO 2	01/1996	2.2	•	0.5	•	•	•
EURO 3	01/2000	2.3	0.2	•	0.15	•	•
EURO 4	01/2006	1.0	0.1	•	0.08	•	•
EURO 5 a	09/2009	1.0	0.1	•	0.06	0.005	•
EURO 5 b	09/2011	1.0	0.1	•	0.06	0.0045	6.0×10^{11}
EURO 6 b	09/2014	1.0	0.1	•	0.06	0.0045	6.0×10^{11}
EURO 6 c	09/2017	1.0	0.1	•	0.06	0.0045	6.0×10^{11}
EURO 6 d	01/2020	1.0	0.1	•	0.06	0.0045	6.0×10^{11}

COMPRESSION IGNITION - DIESEL							
STAGE	DATE	CO G/KM	HC	HC + NOx	NOx	PM	PN #/KM
EURO 1	07/1992	2.72 (3.16)	•	0.97 (1.13)	•	0.14(0.18)	•
EURO 2	01/1996	10	•	0.7	•	0.08	•
EURO 3	01/2000	0.66	•	0.56	0.5	0.05	•
EURO 4	01/2006	0.5	•	0.3	0.25	0.025	•
EURO 5 a	09/2009	0.5	•	0.23	0.18	0.005	6.0×10^{11}
EURO 5 b	09/2011	0.5	•	0.23	0.18	0.0045	6.0×10^{11}
EURO 6 b	09/2014	0.5	•	0.17	0.08	0.0045	6.0×10^{11}
EURO 6 c	09/2017	0.5	•	0.17	0.08	0.0045	6.0×10^{11}
EURO 6 d	01/2020	0.5	•	0.17	0.08	0.0045	6.0×10^{11}

The emissions' maximum limits outlined above have been reduced over the years. VENEPORTE has accompanied these updates, and all of its products are 100% homologated according to the respective norms.

General overview of SCRs' families

The catalytic element is crucial to the SCR technology. In the market there are already developed tree types of SCR systems:

Zeolite-based

Cu-SCR (Copper-Zeolite): veneporte
- Very efficient at low temperatures, in a wider range of NOx compounds than Fe-SCR;
- Excellent capacity of storing ammonia, therefore a bigger capacity of NOx transformation;
- Better thermal stability.
- Loses properties when exposed to sulphur;
- Higher cost compared to V-SCR.

Fe-SCR (Iron-Zeolite):
- Better thermal stability;
- Better conversion at temperatures above 400°C, due to its low tendency to ammonia oxidation;
- At low temperatures shows less conversion capacity than Cu-SCR, however, in the presence of N_2, the conversion rate is similar to the Cu-SCR;
- Tolerant when exposed to sulphur;
- Higher cost compared to V-SCR.

Non-zeolite-based

V-SCR (Vanadium):
- Lower cost;
- Effective at lower temperatures;
- Tolerant to sulphur exposition;
- Low selectivity at higher temperatures;
- Shows bigger deterioration at temperatures above 600°C;
- Volatilization of vanadium toxic species above 650°C.
- Higher toxicity levels due to the presence of vanadium.

VENEPORTE only uses substrates from renowned suppliers that guarantee high performance, durability, and quality similar to the original equipment.

Homologation

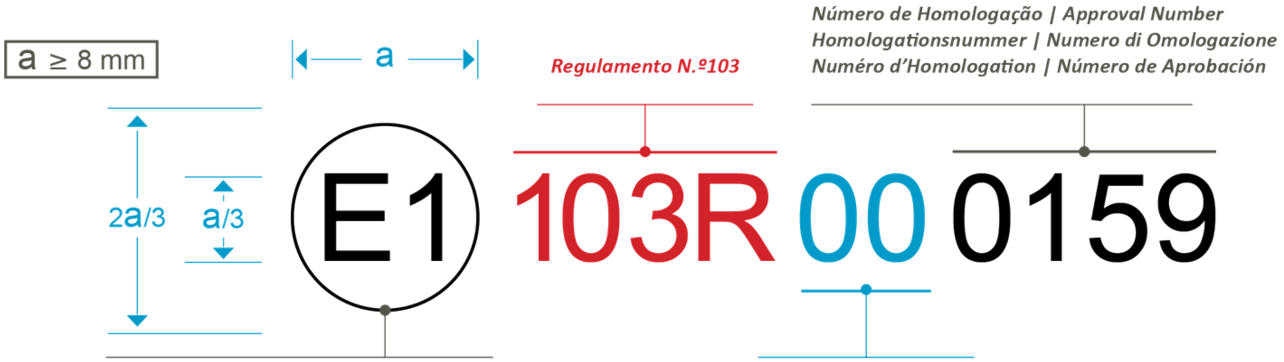

País de Homologação | Approval Country
Land Homologation | Paese di Omologazione
Pays d'Homologation | País de Homologación

1	Germany	13	Luxembourg	26	Slovenia
2	France	14	Switzerland	27	Slovakia
3	Italy	16	Norway	28	Belarusian
4	Netherlands	17	Finland	29	Estonia
5	Sweden	18	Denmark	31	Bosnia-Herzegovina
6	Belgium	19	Romania	32	Latvia
7	Hungary	20	Poland	34	Bulgaria
8	Czech Republic	21	Portugal	37	Turkey
9	Spain	22	Russia	40	Macedonian
10	Yugoslávia	23	Greece	43	Japan
11	UK	24	Irland	45	Australia
12	Austria	25	Croatia	46	Ukraine

Directiva Europeia de Homologação
European Approval Directive
Europäische Richtlinien Homologation
Direttiva Europea di Omologazione
Directive Européen d´Homologation
Directiva Europea de Homologación

Regarding its approval, the SCR´s available in the aftermarket must follow the rules set in regulation 103 of the United Nations Economic Comission for Europe (UNECE) .

How does it work?

All SCRs produced by VENEPORTE are submitted to the following tests:

- Fitting test;
- Harmful gases emissions: CO, HCs, NOx;
- Backpressure measurment;
- Power measurment.

Homologated SCRs

- The backpressure and noise levels are identical to the Original Equipment (OEM/OES);
- The correct backpressure is important for a good engine performance;
- They allow greater durability of the engine and the exhaust system components;
- Fuel consumption will be similar to the specified by the manufacturer;
- Similar power to the OE;
- The installation of non-approved SCRs is not permitted (it is forbidden and illegal) in the European Union;
- They respect the requirements of the standard emissions values demanded by the European Union.

Cares to take with your SCR - Malfunction causes

- Inappropriate assembly;
- Contamination by the usage of incurrect fuel, oil, and additives;
- External impact damage (caused by hittinh a solid object);
- Monolith fusion caused by ignition failure.

Available references

- **SCR´s - 25 active references - more than 680 applications**

Reasons to choose VENEPORTE

- Developed similar ti OEM/OES products;
- Only uses subtrates from renowned suppliers that guarantee high performance, durability, and quality similar to the original equipment;
- Range 100% homologated;
- Direct fit assembling - guaranteed;
- High resistance to corrosion due to quality raw material;
- 100% traceability of all components;
- According to Euro 6 emissions levels.